Chilled Water Fan Coil Unit

Maxxum™
Model:HCCA Size 10-24

Features and Benefits

The HCCA High Capacity Chilled Water Fan Coil Unit

HCCA fan coil units are the best solution for separated and independent air conditioning system that designed with airflow range from 1000CFM to 2400CFM. They have been used successfully to avoid cross contamination from bacteria.

■ Features

- Flexible
  With rear, bottom return plenum or without plenum
- High Capacity
  Three, four or six rows of cooling coils with aluminum blue fins
- Two or Four Pipe System
  Cooling only or cooling/heating capability
- Rigid Casing
  1.2 mm galvanized steel with 10 mm non-flammable PU insulation
- Independently levelable, one piece stamped drain pan
- Permanently lubricated motor bearings
- Balanced fan and motor
- Factory run tested
- Meet BS 476 fire code
- High external static application up to 250 Pascal

■ Benefits

- Fits most chilled water applications
- Reduced height for normal and specialized installations
- One unit provides total comfort... Cooling and heating
- Prevents moisture on the casing
- Adjustable drain pan slope
- Reliable Operation

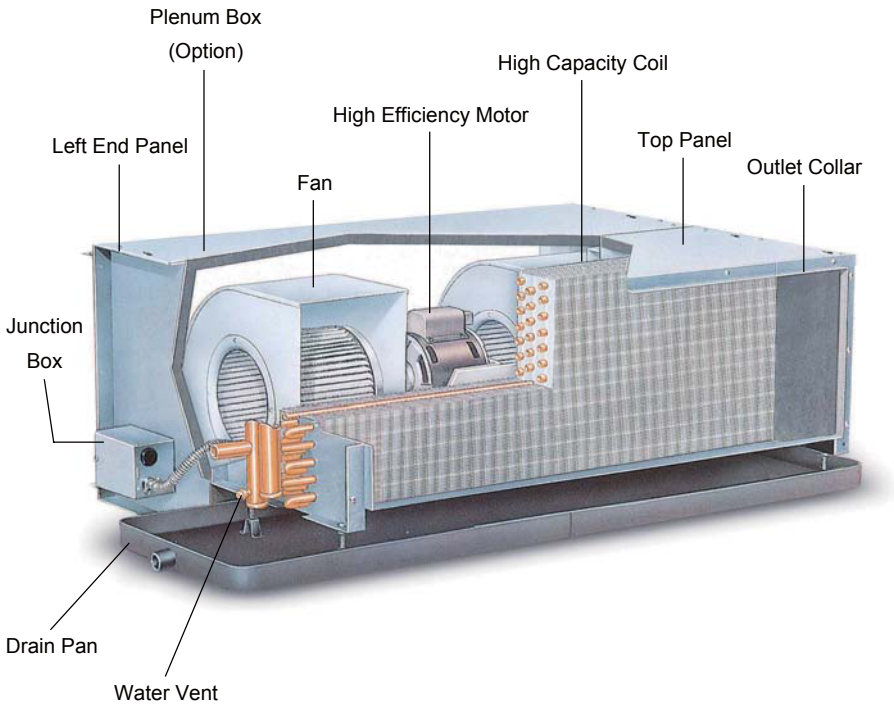

HCCA Accessories

ZN510/520

Zone Sensor

Water Valve

LCD Thermostat

HCCA Model Nomenclature

H	C	C	A	14	C	N	M	1	N	A	N	C
1	2	3	4	5,6	7	8	9	10	11	12	13	14

DIGIT 1

H = High

DIGIT 2

C = Capacity

DIGIT 3

C = Concealed

DIGIT 4

A = Development Sequence

DIGIT 5,6 - Size / Nominal CFM (@100 Pa ESP)

10 = 1000 CFM
14 = 1400 CFM
18 = 1800 CFM
24 = 2400 CFM

DIGIT 7 - Coil Row, Connection Side

C = 3 Row Cooling, Right Hand
D = 3 Row Cooling, Left Hand
E = 4 Row Cooling, Right Hand
F = 4 Row Cooling, Left Hand
J = 3 Row Cooling, 1 Row Heating, Right Hand
K = 3 Row Cooling, 1 Row Heating, Left Hand
L = 4 Row Cooling, 2 Row Heating, Right Hand
M = 4 Row Cooling, 2 Row Heating, Left Hand
N = 6 Row Cooling, Right Hand
P = 6 Row Cooling, Left Hand
S = Special

DIGIT 8 - Electric Heat 220V (240V)

N = None
A = 1.0 kW(1.2 kW) Heater (Size 10~24)
B = 1.5 kW(1.8 kW) Heater (Size 10~24)
C = 2.0 kW(2.4 kW) Heater (Size 10~24)
D = 2.5 kW(3.0 kW) Heater (Size 10~24)
E = 3.0 kW(3.6 kW) Heater (Size 10~24)
F = 3.5 kW(4.2 kW) Heater (Size 10~24)
G = 4.0 kW(4.8 kW) Heater (Size 14~24)
H = 5.0 kW(6.0 kW) Heater (Size 18~24)
I = 6.0 kW(7.2 kW) Heater (Size 18~24)
J = 7.0 kW(8.4 kW) Heater (Size 24 Only)
K = 8.0 kW(9.6 kW) Heater (Size 24 Only)
S = Special
*kW in bracket for 240V only

DIGIT 9 - Motor Type

M = Normal Duty with Temperature Cutout
S = Special

DIGIT 10 - Voltage / Hertz / Phase

1 = 220-240 / 50 / 1
2 = 220-240 / 60 / 1
S = Special

DIGIT 11 - Water Connection

N = None
A = 2-pipe, with 2-way Valve
B = 2-pipe, with 3-way Valve
C = 4-pipe, with 2-way Valves
D = 2-pipe, with 2-way Valve & LCD Thermostat
F = 2-pipe, with 3-way Valve & LCD Thermostat
G = 4-pipe, with 2-way Valves & LCD Thermostat
H = 2-pipe, with 2-way Valve & ZN510 w/ Zone Sensor
J = 2-pipe, with 3-way Valve & ZN510 w/ Zone Sensor
K = 4-pipe, with 2-way Valves & ZN510 w/ Zone Sensor
L = 2-pipe, with 2-way Valve & ZN520 w/ Zone Sensor
M = 2-pipe, with 3-way Valve & ZN520 w/ Zone Sensor
P = 4-pipe, with 2-way Valves & ZN520 w/ Zone Sensor
Q = 2-pipe, with 2-way Floating Valve & ZN520 w/ Zone Sensor
R = 2-pipe, with 3-way Floating Valve & ZN520 w/ Zone Sensor
S = 4-pipe, with 2-way Floating Valves & ZN520 W/Zone Sensor

DIGIT 12 - Drain Pan

A = STD. Galvanized Steel / 7mm PE Insulation
B = Long Galvanized Steel / 7mm PE Insulation
C = STD. SUS / 7mm PE Insulation
D = Long SUS / 7mm PE Insulation
E = STD. Galvanized Steel / 6mm Non-Flammable BS476, Part7 Insulation
F = Long Galvanized Steel / 6mm Non-Flammable BS476, Part7 Insulation
G = STD. SUS / 6mm Non-Flammable BS476, Part7 Insulation
H = Long SUS / 6mm Non-Flammable BS476, Part7 Insulation
I = STD. Galvanized Steel / 10mm Non-Flammable BS476, Part7 Insulation
J = Long Galvanized Steel / 10mm Non-Flammable BS476, Part7 Insulation
M = STD. SUS / 10mm Non-Flammable BS476, Part7 Insulation
O = Long SUS / 10mm Non-Flammable BS476, Part7 Insulation
R = STD. Galvanized Steel / 15mm Non-Flammable BS476, Part7 Insulation
T = Long Galvanized Steel / 15mm Non-Flammable BS476, Part7 Insulation
U = STD. SUS / 15mm Non-Flammable BS476, Part7 Insulation
V = Long SUS / 15mm Non-Flammable BS476, Part7 Insulation
S = Special

DIGIT 13 - Plenum / Filters

N = Without Return Plenum / No Filter
F = With Rear Return Plenum / No Filter
G = With Rear Return Plenum / 25mm Aluminum Media
P = With Rear Return Plenum / 25mm Foam Media
Q = With Bottom Return Plenum / No Filter
R = With Bottom Return Plenum / 25mm Aluminum Media
T = With Bottom Return Plenum / 25mm Foam Media
S = Special

DIGIT 14 - Design Sequence

C = Third

Notes:

1. The wiring of thermostat or zone sensor to motors, ZN or valves must be done on job site.
2. Non-flammable insulation meet the regulation of BS476 part7 class 1 and part6 class O.

Performance Data

Cooling Capacity (kW)

220V/60Hz/1P, High Speed, Normal Motor, ESP 100Pa, EWT:7℃

UNIT SIZE	3ROW								4ROW								6ROW							
	AIRFLOW(CMH)	EAT(DB)	EAT(WB)	SH(kW)	TH(kW)	WTR	WFR	WPD	AIRFLOW(CMH)	EAT(DB)	EAT(WB)	SH(kW)	TH(kW)	WTR	WFR	WPD	AIRFLOW(CMH)	EAT(DB)	EAT(WB)	SH(kW)	TH(kW)	WTR	WFR	WPD
HCCA10	1928	24	17	6.37	7.08	5	0.388	14.24	1886	24	17	6.73	8.35	5	0.399	19.17	1801	24	17	6.88	9.41	5	0.450	34.51
		26	18.7	6.89	8.45	5	0.404	15.27		26	18.7	7.31	9.97	5	0.476	25.96		26	18.7	7.53	11.23	5	0.536	46.62
		28	22	6.97	12.41	5	0.593	29.81		28	22	7.65	14.63	5	0.599	25.96		28	22	7.89	15.81	5.7	0.663	67.55
		30	23.8	7.59	14.85	5	0.709	40.94		30	23.8	8.39	17.51	5	0.837	70.08		30	23.8	8.41	18.12	6.6	0.658	66.73
		32	25.5	8.19	17.23	5	0.823	53.50		32	25.5	8.19	17.23	5	0.823	53.50		32	25.5	8.91	20.35	7.4	0.661	67.11
HCCA14	2328	24	17	8.36	10.26	5	0.490	17.45	2294	24	17	9.05	12.24	5	0.585	30.24	2226	24	17	9.12	12.92	5	0.617	7.86
		26	18.7	9.09	12.25	5	0.585	23.76		26	18.7	9.9	14.60	5	0.698	41.14		26	18.7	10.01	15.41	5	0.736	10.82
		28	22	9.46	17.98	5	0.859	46.84		28	22	10.47	20.85	5.4	0.914	66.28		28	22	11.02	22.62	5	1.081	20.86
		30	23.8	10.39	21.52	5	1.028	64.70		30	23.8	11.21	24.03	6.2	0.921	67.14		30	23.8	12.25	27.07	5	1.294	28.15
		32	25.5	10.92	23.97	5.8	0.981	59.48		32	25.5	11.96	27.22	6.8	0.952	71.25		32	25.5	13.36	31.32	5.1	1.480	35.16
HCCA18	3211	24	17	11.65	14.45	5	0.690	34.52	3203	24	17	12.91	17.59	5	0.841	62.37	3186	24	17	13.90	20.05	5	0.958	19.32
		26	18.7	12.67	17.23	5	0.823	47.16		26	18.7	13.77	20.10	5.4	0.885	68.22		26	18.7	15.29	23.92	5	1.143	25.75
		28	22	12.77	23.94	6.0	0.957	61.76		28	22	14.05	27.49	7.0	0.942	76.34		28	22	17.04	35.12	5	1.678	48.43
		30	23.8	13.62	27.65	6.7	0.986	65.16		30	23.8	14.97	31.53	7.9	0.954	78.08		30	23.8	19.00	42.03	5	2.008	65.44
		32	25.5	14.46	31.22	7.4	1.012	68.35		32	25.5	16.44	37.15	7.8	1.133	106.29		32	25.5	20.35	47.57	5.5	2.074	69.14
HCCA24	4281	24	17	15.89	20.15	5.5	0.882	71.38	4230	24	17	16.89	22.99	5	1.098	22.10	4145	24	17	18.77	27.99	5	1.337	44.59
		26	18.7	16.92	23.04	6.1	0.900	73.96		26	18.7	18.47	27.42	5	1.310	30.11		26	18.7	20.71	33.39	5	1.596	60.98
		28	22	16.64	30.86	8.1	0.906	74.74		28	22	20.02	40.26	5	1.924	59.77		28	22	21.98	45.52	6.3	1.736	70.68
		30	23.8	17.63	35.29	9.0	0.937	79.40		30	23.8	21.67	46.93	5.5	2.051	67.11		30	23.8	23.69	52.45	7.1	1.763	72.67
		32	25.5	19.51	42.35	9.0	1.124	110.17		32	25.5	23.14	53.16	6.1	2.096	69.81		32	25.5	25.31	59.26	7.8	1.821	77.02

220V/50Hz/1P, High Speed, Normal Motor, ESP 100Pa, EWT:7

UNIT SIZE	3ROW								4ROW								6ROW							
	AIRFLOW(CMH)	EAT(DB)	EAT(WB)	SH(kW)	TH(kW)	WTR	WFR	WPD	AIRFLOW(CMH)	EAT(DB)	EAT(WB)	SH(kW)	TH(kW)	WTR	WFR	WPD	AIRFLOW(CMH)	EAT(DB)	EAT(WB)	SH(kW)	TH(kW)	WTR	WFR	WPD
HCCA10	1928	24	17	5.96	7.51	5	0.359	12.46	1886	24	17	6.30	8.75	5	0.418	20.76	1495	24	17	6.60	9.92	5	0.474	37.72
		26	18.7	6.48	8.97	5	0.428	16.87		26	18.7	6.90	10.44	5	0.499	28.17		26	18.7	7.28	11.84	5	0.566	51.24
		28	22	6.83	13.16	5	0.629	33.06		28	22	7.54	15.33	5	0.733	55.29		28	22	7.86	16.43	5	0.654	65.93
		30	23.8	7.50	15.75	5	0.753	45.59		30	23.8	8.36	18.35	5	0.877	76.22		30	23.8	8.46	18.88	6.8	0.660	67.05
		32	25.5	8.14	18.28	5	0.874	59.64		32	25.5	8.90	20.68	5.6	0.886	77.69		32	25.5	9.13	21.54	7.3	0.705	75.29
HCCA14	2328	24	17	8.91	11.17	5	0.534	20.26	2294	24	17	9.61	13.26	5	0.634	34.78	2294	24	17	9.65	13.98	5	0.668	9.10
		26	18.7	9.69	13.32	5	0.637	27.58		26	18.7	10.52	15.83	5	0.756	47.33		26	18.7	10.60	16.68	5	0.797	12.44
		28	22	10.18	19.56	5	0.953	54.53		28	22	10.80	21.51	6.3	0.815	54.06		28	22	11.82	24.49	5	1.170	23.81
		30	23.8	11.18	23.41	5	1.119	75.47		30	23.8	11.83	25.50	6.6	0.921	67.13		30	23.8	13.16	29.31	5	1.400	30.08
		32	25.5	11.86	26.38	5.6	1.131	76.94		32	25.5	12.73	29.20	7.0	0.990	76.38		32	25.5	14.44	34.01	5	1.625	41.11
HCCA18	3211	24	17	10.93	13.77	5	0.658	31.76	3203	24	17	12.10	16.69	5	0.797	56.72	2939	24	17	12.98	18.85	5	0.901	17.49
		26	18.7	11.90	16.43	5	0.785	43.36		26	18.7	13.25	19.91	5	0.951	77.60		26	18.7	14.28	22.49	5	1.075	23.31
		28	22	12.13	23.07	5.8	0.956	61.68		28	22	13.01	25.50	7.3	0.836	61.66		28	22	15.98	33.02	5	1.578	43.73
		30	23.8	13.10	27.04	6.2	1.036	71.26		30	23.8	14.06	29.79	8.0	0.893	69.37		30	23.8	17.84	39.52	5	1.888	58.99
		32	25.5	13.96	30.67	6.8	1.077	76.42		32	25.5	14.90	33.50	8.7	0.919	73.01		32	25.5	19.59	45.87	5	2.191	75.87
HCCA24	4281	24	17	15.89	18.84	6.2	0.728	50.80	4230	24	17	17.13	23.26	5	1.111	22.56	4188	24	17	18.67	27.89	5	1.332	44.30
		26	18.7	16.73	21.88	6.8	0.765	55.43		26	18.7	18.73	27.75	5	1.326	30.76		26	18.7	20.59	33.27	5	1.590	60.49
		28	22	16.59	30.20	8.5	0.845	66.06		28	22	20.28	40.74	5	1.947	61.07		28	22	21.50	44.51	6.6	1.619	62.43
		30	23.8	17.62	34.72	9.4	0.884	71.62		30	23.8	21.77	47.03	5.7	19.85	63.23		30	23.8	23.45	52.05	7.2	1.734	70.58
		32	25.5	18.68	39.20	10.5	0.892	72.78		32	25.5	23.56	54.17	5.9	2.190	75.62		32	25.5	25.05	58.77	7.9	1.784	74.20

Heating Capacity (kW)

UNIT SIZE	WFR(LPS)	EAT 21℃ 220V/60Hz/1P						EAT 21℃ 220V/50Hz/1P					
		1-ROW			2-ROW			1-ROW			2-ROW		
		45℃	55℃	65℃	45℃	55℃	65℃	45℃	55℃	65℃	45℃	55℃	65℃
HCCA10	0.2	4.26	6.04	7.89	6.23	8.86	11.50	4.41	6.25	8.16	6.44	9.16	11.89
HCCA10	0.3	4.45	6.36	8.20	6.36	9.09	11.73	4.61	6.58	8.49	6.58	9.40	12.13
HCCA14	0.2	5.31	7.53	9.83	7.76	11.05	14.33	5.55	7.88	10.28	8.12	11.55	14.99
HCCA14	0.3	5.55	7.93	10.23	7.93	11.33	14.62	5.80	8.29	10.69	8.30	11.85	15.29
HCCA18	0.2	6.45	9.14	11.93	9.41	13.40	17.38	6.28	8.91	11.63	9.19	13.07	16.96
HCCA18	0.3	6.73	9.62	12.41	9.62	13.74	17.72	6.57	9.38	12.10	9.39	13.41	17.30
HCCA24	0.2	7.57	10.73	14.01	11.06	15.74	20.42	7.61	10.79	14.09	11.12	15.53	20.54
HCCA24	0.3	7.91	11.30	14.58	11.30	16.14	20.82	7.95	11.36	14.65	11.37	16.24	20.95

SH :Sensible cooling capacity, kW
TH :Total cooling capacity, kW
ESP : External static pressure, Pa
CMH : Cubic meter per hour
LPS : Liter per second
EWT : Entering water temperature, ℃
EAT : Entering air temperature,℃
WTR : Water temperature rise,℃
WPD : Water pressure drop, KPa
WFR : Water flow rate, LPS

Electrical Data
Sound Power Ratings
Coil Connection

Electrical Data

220V/60Hz/1P input Power (kW) at 100Pa ESP

HCCA UNIT		Fan Speed		
SIZE	ROW	High	Medium	Low
10	3	0.46	0.33	0.29
14	3	0.54	0.49	0.45
18	3	1.01	0.75	0.57
24	3	1.36	1.19	0.94
10	4	0.45	0.32	0.29
14	2	0.53	0.49	0.44
18	4	1.00	0.74	0.56
24	4	1.34	1.17	0.92
10	6	0.44	0.32	0.28
14	6	0.52	0.47	0.43
18	6	0.99	0.73	0.55
24	6	1.30	1.14	0.91

220V/50Hz/1P input Power (kW) at 100Pa ESP

HCCA UNIT		Fan Speed		
SIZE	ROW	High	Medium	Low
10	3	0.27	0.25	0.19
14	3	0.41	0.38	0.34
18	3	0.64	0.52	0.42
24	3	1.08	0.89	0.77
10	4	0.26	0.24	0.19
14	4	0.39	0.37	0.33
18	4	0.63	0.52	0.42
24	4	1.06	0.87	0.75
10	6	0.25	0.23	0.18
14	6	0.37	0.35	0.31
18	6	0.62	0.51	0.41
24	6	1.02	0.84	0.72

Sound Power Ratings

60Hz HCCA Sound Power Level

ITEM & SPEED		Octave Band (dB) & Central Frequency (Hz)						
UNIT SIZE	Fan Speed	125	250	500	1000	2000	4000	8000
10	High	71	68	63	59	58	60	56
10	Medium	65	62	57	53	53	52	45
10	Low	63	59	56	52	52	49	44
14	High	71	69	63	58	58	59	56
14	Medium	68	66	59	55	56	56	50
14	Low	66	62	57	53	54	58	45
18	High	78	74	68	67	65	67	63
18	Medium	73	68	63	61	60	60	54
18	Low	68	63	58	56	55	53	46
24	High	84	82	75	72	70	71	70
24	Medium	81	79	72	68	67	69	65
24	Low	77	74	68	64	63	65	60

50Hz HCCA Sound Power Level

ITEM & SPEED		Octave Band (dB) & Central Frequency (Hz)						
UNIT SIZE	Fan Speed	125	250	500	1000	2000	4000	8000
10	High	71	67	62	58	57	57	53
10	Medium	65	65	60	56	55	55	50
10	Low	64	59	55	51	51	48	42
14	High	73	72	65	61	60	61	59
14	Medium	71	68	63	59	58	59	56
14	Low	68	64	59	55	56	56	50
18	High	77	73	67	66	65	67	63
18	Medium	74	69	64	62	62	63	57
18	Low	72	65	60	58	59	57	51
24	High	84	83	76	72	71	72	71
24	Medium	82	80	73	70	68	70	67
24	Low	79	76	70	66	65	67	63

Notes:
1. Data referenced to 10^{-12} watts.
2. Above performance determined with Normal static motor operating against 0 Pa ESP (no ducting, ceiling material or other sound attenuating materials used).

Coil Connection

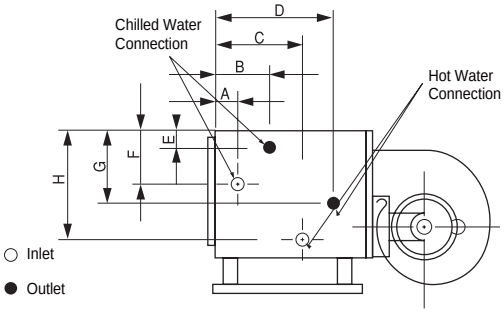

Cooling & Heating Coil Connection Dimension										
Unit			10		14		18		24	
Coil Type		Cooling	3Row	4Row	3Row	4Row	3Row	4Row	3Row	4Row
		Heating	1Row	2Row	1Row	2Row	1Row	2Row	1Row	2Row
DIMENSION	A		109	65	109	65	109	65	109	65
	B		153	131	153	131	153	131	153	131
	C		182	165	182	165	182	165	182	165
	D		187	208	187	208	187	208	187	208
	E		100	88	152	139	152	139	152	172
	F		228	228	229	229	229	229	229	196
	G		60	154	66	165	66	165	174	117
	H		263	216	290	170	290	170	181	170
CONN. SIZE	Sweat (inch)	Cooling	7/8	7/8	7/8	7/8	7/8	7/8	7/8	1-1/8
		Heating	5/8	5/8	5/8	7/8	5/8	7/8	5/8	7/8
	Thread (FPT)	Cooling	3/4	3/4	3/4	3/4	3/4	3/4	3/4	1
		Heating								3/4

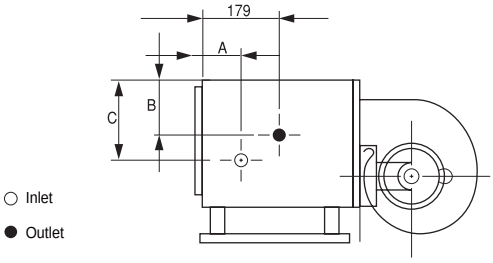

Cooling Coil Connection Dimension												
Unit		10			14			18			24		
Coil Type		3R	4R	6R	3R	4R	6R	3R	4R	6R	3R	4R	6R
DIMENSION	A	131	109	65	131	109	65	131	109	65	131	109	65
	B	88	88	88	137	137	172	137	137	172	137	172	172
	C	215	228	228	216	229	196	216	229	196	216	196	196
CONN. SIZE	Sweat (inch)	7/8	7/8	7/8	7/8	7/8	1-1/8	7/8	7/8	1-1/8	7/8	1-1/8	1-1/8
	Thread (FPT)	3/4	3/4	3/4	3/4	3/4	1	3/4	3/4	1	3/4	1	1

Note:Dimension in mm 25.4mm = 1 inch

Dimensions
Wiring Diagram
Weight

Dimensions

UNIT SIZE	Caxe & Drain Pan Size					External Dimension										Without Plenum	
	A	B	C	D	D1	E	F	G	H	I	J	L	M	N	O	Q	R
HCCA-10	887	921	189	*1164	*1349	483	*748	703	266	317	*409	310	825	370	889	*706	687
HCCA-14	963	997	157	*1208	*1454	483	*748	703	316	370	*416	310	901	370	965	*706	687
HCCA-18	1090	1124	171	*1349	*1624	449	*799	754	316	370	*448	361	1028	412	1092	*758	739
HCCA-24	1623	1657	163	*1874	*2074	449	*799	754	216	370	*448	361	1561	412	1625	*758	739

Notes : 1. Dimension is mm.
2. Right hand coil connection shown.
3. External wiring, controls not supplied by Trane.
4. See coil connections size and location.
5. D=standard drain pan, D1=extend drain pan.

*Represent outine dimension of unit.

Figure 1 : HCCA Unit Without Plenum

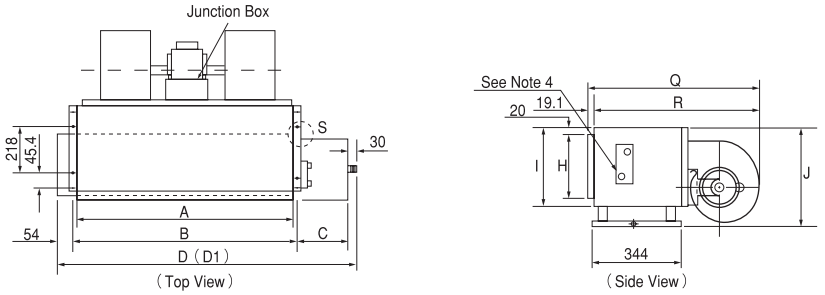

Figure 2 : HCCA Unit With Rear Return Plenum

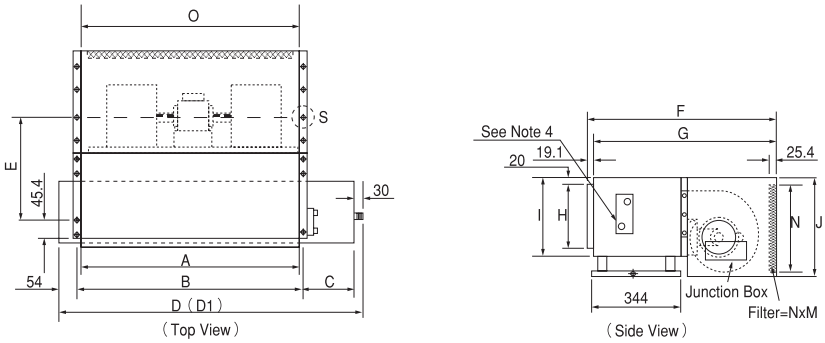

Figure 3 : HCCA Unit With Bottom Return Plenum

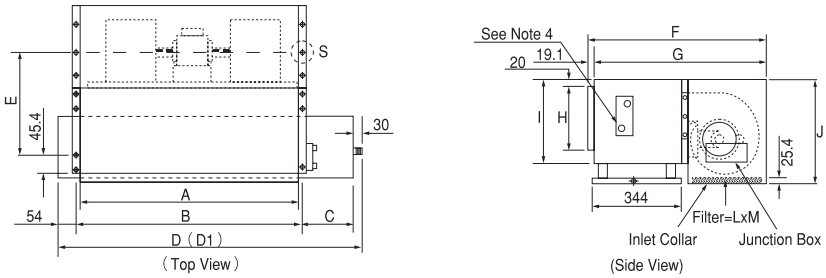

Figure 4 : S & T Drain Pan, For (Fig 1, 2, 3)

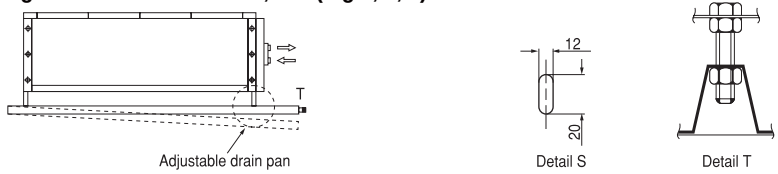

Wiring Diagram

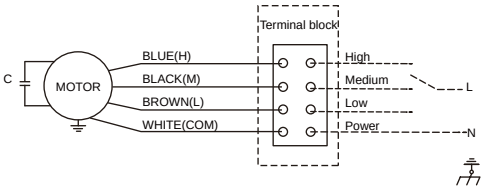

Weight

HCCA Unit without Plenum Operating Weights (kg)				
Row/Size	10	14	18	24
3ROW	50	54	71	81
4ROW	54	59	76	90
6ROW	62	70	88	105

HCCA Unit with Plenum Operating Weights (kg)				
Row/Size	10	14	18	24
3ROW	64	69	90	106
4ROW	68	74	95	115
6ROW	76	85	107	132

HCCA Unit without Plenum Net Weights (kg)				
Row/Size	10	14	18	24
3ROW	47	50	66	75
4ROW	50	54	70	82
6ROW	56	62	79	93

HCCA Unit with Plenum Net Weights (kg)				
Row/Size	10	14	18	24
3ROW	61	65	85	100
4ROW	64	69	89	107
6ROW	70	77	98	120

*Add 4kg W / ZN + valve

Product Specification

Basic Unit

The Trane Model HCCA fan coil unit consisting rigid galvanized steel casing, copper tube/ aluminum blue fin coil type heat exchanger, fan board assembly, manual coil air vent with drain pan, junction box with terminal strip.

Unit casing manufactured by 1.2mm thick galvanized steel with internal insulated high-density non-flammable foam.

The standard unit is without return air plenum, or selected with bottom return air plenum or rear return air plenum in option, while filter is another option associated to the return air plenum.

Fan Board

All motors, with internal thermal temperature cutout above 125℃ are permanent split-capacitor, three speed, tap wound, induction type for maximum efficiency. Motors have permanently lubricated ball bearings and all-direction, vibration isolating mountings to ensure vibration free operation and minimum noise. Motor wiring is enclosed by flexible metal conduit and connected to the junction box. All motors are performed in-house test and finished unit test again prior to shipment.

All unit sizes have both ends shaft for motor. The material of fan wheel is galvanized steel and mounted directly onto each shaft. The DIDW centrifugal fans have balanced and forward curved blades. Fan housings are made of galvanized sheet steel. The fan board can be simply removed by loosening the fasteners for easy service purpose.

Coil

Coils are 3/8 inch OD copper tubes mechanically bonded into aluminum blue fins. A manual air vent with drain line to the drain pan is standard to avoid any water drips when venting. Standard coils are factory leak tested at 25kg/cm^2 (360 psi) and are recommended for operation up to 16kg/cm^2 (230 psi) working pressure. Water inlet/outlet connections shall be with 3/4-inch female pipe thread(GBT19001-2000).

Available coils are 3 row cooling, 4 row cooling, 6 row cooling, 3 row cooling + 1 row heating, and 4 row cooling + 2 row heating.

Drain Pan

The drain pan is 28mm depth with 0.8mm thickness galvanized steel c/w internal epoxy resin coating.

For sure without leakage occur, the fabrication of drain pan by one-piece stamping process with seamless and no joint. The standard insulation material is 7mm thickness, 27 kg/m^3 density PE foam. The drain pan has one 3/4-inch male pipe thread connection.

Options

Heater

Two types of heating device are available: hot water and electric sheathed heating element.

Plenum & Filters

Rear return air plenum or bottom return air plenum, with 10mm thick non-flammable insulation as internal lining for fan motor noise reduction.

Return air plenum fits optional 25mm thick foam or aluminum filter.

Stainless Steel Drain Pan

The material shall have graded SUS 304 or equivalent.

Factory-mounted Control valve Package

Factory mounted 2-way or 3-way control valve with fitting to the coil, it shall be tested against the maximum working pressure of coil.

Factory mounted and functional test done for Trane ICS fan coil controller. All cables are wired to a terminal block inside a factory installed junction box.

Trane Building Management System

The Tracer Summit™ system is designed for monitoring and control air conditioning system, lighting and other controllable devices for building.
Such Building Control Unit (BCU) manages all Unit Control Modules (UCM) for different zones management. Each UCM performs scan on couples of HFCF equips ZN controller in specific zone and regularly report to the central system.

The Trane Fan Coil...
...Invented by Trane
...Perfected by Trane

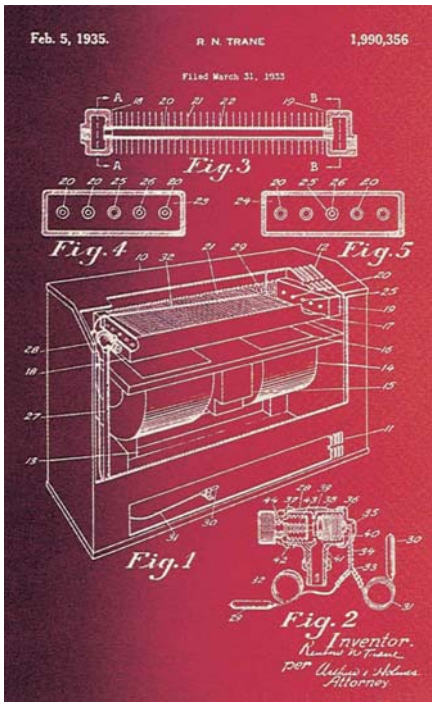

Since 1885, Trane has been at the technological forefront of air conditioning. The company's pioneering spirit, commitment to research and pursuit of quality have made it a world leader in the manufacture of water chillers.

Over 70 years ago Trane produced the first fan coil unit and in so doing created a product which is now built worldwide. The universal acceptance of this product has prompted Trane to focus the same engineering experience to the fan coil as given to the refrigeration products.

TRANE®

www.trane.com

For more information, contact your local Trane office or e-mail us at comfort@trane.com

ISO 9001 / ISO 14001 / OHSAS18001 Qualified Factory - Trane Zhongshan

Literature Order Number	HCCA-PRC001-EN
Date	July 2008
Supersedes	NEW